Expt. 2 : γ- absorption. GM (c)
Geiger

1. GENERAL INFORMATION

1.1 SCOPE

Para Nuclear Counter Model **PNC-1G** is a micro-controller based, economical, stand alone, portable mains operated instrument for Nuclear Counting application. It is a versatile instrument designed to cater counting application requirements.

Para Nuclear Counter Model **PNC-1G** uses GM tube as nuclear radiation detector. Required high voltage required for GM detector is generated in Model **PNC-1G**. The load resistor for GM tube and the front end electronics for pulse processing are housed in **PNC-1G**. Single coaxial cable with BNC connector connects the GM tube to **PNC-1G**.

Para Nuclear Counter Model **PNC-1G** can store 1000 counts data in a non-volatile memory. These readings can be downloaded to PC via RS-232 interface or printed on printer via parallel interface.

Para Nuclear Counter Model **PNC-1G** is ideally suited for Nuclear Experiments carried out in University and colleges. It is also useful for radiation counting for Health Physics applications in radioisotope laboratories, nuclear reactors, nuclear power plants, nuclear medicine centers etc.

1.2 DESCRIPTION

Model **PNC-1G** has following functional blocks

a) Detector - GM Tube
b) High Voltage Supply & Pulse Processing Circuit
c) Microcontroller with RTC and Memory
d) LCD Menu Display & Keypad
e) Printer Output
f) PC Interface

1.2.1 DETECTOR

Para Nuclear Model **PNC-1G** can be coupled to any standard, halogen quenched, and with operating voltage less than [illegible]. Normally, Model **PNC-1G** is supplied with GM tube type LND 712 mounted in powder coated Aluminum housing. The operating voltage for the tube is [illegible] volts. The GM detector is connected by a [illegible] cable with BNC connector mounted on the front panel.

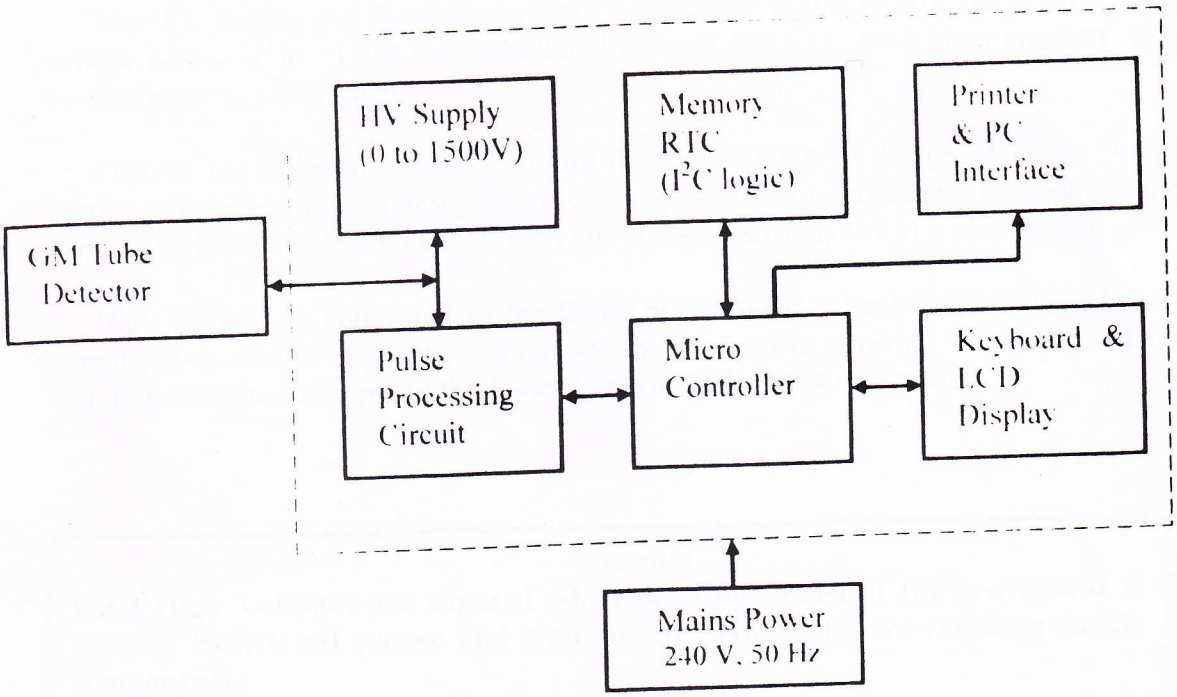

Fig. 1 FUNCTIONAL BLOCK DIAGRAM OF PNC-1G

1.2.2 H.V. SUPPLY & PULSE SHAPING CIRCUIT

The H[illegible]ge (0 to +1500 Volts) necessary to [illegible]rate GM Tube is generated in Model **PNC- 1G**. The voltage is continuously adjustable to [illegible]1500 volts using helipot with graduated d[illegible]nted on the front panel. **Adjusted HV is displayed on the LCD.**

The H.V. [illegible]pply is a dc to dc converter using epoxy molded ferrite transformer. High voltage output [illegible] to +1500 Volts is filtered through 100 KΩ [illegible] 0.01 Microfarad RC filter for minimum [illegible]le content.

Current amplifier and ferrite core are the center point of design of H. V. Supply. Ferrite core transformer, is designed to work with oscillator and to provide continuously variable high voltage from 0 to + 1500 Volts at approximately 0.1 mA load current.

High Voltage is connected to the GM Tube through a load resistor. The detector output pulses due to incident radiation are then shaped to generate TTL pulses. These TTL pulses are fed as input to the Timer/Counter of the Micro controller.

Warning

Fatal High Voltages are exposed when the front panel of the instrument is opened. Switch off power and wait for 30 seconds before touching inside components.

1.2.3 MICRO CONTROLLER

PNC-1G uses Atmel make 8 bit microcontroller type 89C55. Real Time Clock, Event Counter and 64KB EEPROM are additional IC logic devices interfaced to the controller.

1.2.4 LCD MENU DISPLAY & KEY PAD

16 Characters x 2 line large display with wide viewing angle LCD display helps user to communicate with Model **PNC-1G** and set the parameters by using keypad. LCD backlit will automatically turn ON when **PNC-1G** is operated on the mains supply.

Panel embedded 4 keys are used for setting up various parameters and controlling the acquisition, data recall and other operations. All the 4 keys carry different significance during the operation. Displayed Character on LCD, just above each key shows the function of that key. For example > symbol indicates that pressing of this key will advance the cursor to next position of the displayed number.

1.2.5 PRINTER OUTPUT

Model **PNC-1G** generates formatted output for printing on centronics parallel printer. Pinter port 25 pin D male connector on the rear panel is for connecting it to any standard centronics parallel printer to produce hard copy of result of an experiment.

1.2.6 PC INTERFACE

Model **PNC-1G** generates formatted serial output for data transfer to PC on COM or Serial Port. COM port 9 pin D male connector on the rear panel is for connecting it to PC for transferring the data to PC. Support software for data transfer to PC in Windows environment, is provided with Model PNC-1G.

2. SPECIFICATIONS

ELECTRONICS	: All solid state Micro Controller based design
OPERATING MODES	: Preset Timer
PRESET TIMER	: 9999 Secs *
NUMBER OF RUNS	: Settable between 1 to 1000
MENU DISPLAY	: **Counts** : 999999 **Time** : 9999 **Runs** : 1000 **Paralysis Time**: 250, 350, 550 microseconds & 'OFF'
HV SUPPLY	: Adjustable to 1500V by setting the helipot with graduated dial
DATA STORAGE	: Store and recall facility for data up to 1000 readings
USER INTERFACE	: 4 keys keypad with 16x2 lines LCD for displaying Key function
DATA TRANSFER	: **For PC** : RS-232 COM Port **For Printer** : Centronics Parallel Port
POWER	: Mains Operated 240V (± 10 V) AC, 50Hz

GENERAL

Mechanical

Dimensions	: 200 L x 208 D x 90 H mm
Weight	: Approximately 2 kg

* Optional HH:MM:SS format is supplied on specific request.

3. INDICATORS/ CONTROLS/ CONNECTORS

Front Panel

Indicators

MENU DISPLAY : 16 x 2 Lines Large Character LCD Display

Controls

4 KEYS PAD : for Multifunction Operation

HV ADJUST : Helipot with graduated dial to set HV

Connectors

DETECTOR : BNC Female connector for GM Tube

Rear Panel

Controls

ON/OFF SWITCH : Instrument ON/OFF switch

Connectors

MAINS : Mains cable receptacle with built-in fuse holder

RS-232 CONNCTOR : 9 pin D type PC Interface connector

PRINTER OUTPUT : 25 Pin D type Printer interface connector

5 OPERATION

5.1 OPERATING PROCEDURE

Following procedure should be adopted for trouble free operation of **PNC-1G**.

1. Connect Mains cable to the mains cable respectable mounted on rear panel of the instrument.
2. Connect the GM Detector cable BNC Connector to BNC female connector on the front panel.
3. Turn the instrument ON by setting ON OFF switch to ON position. This will turn ON the LCD Menu display.
4. Adjust HV supply to the value specified for the GM tube used. For GM tube model LND 712, the operating voltage is **550** Volts.
5. Press any key and follow the operating instructions as prompted by LCD Menu.
6. Refer the details on Set Up, Modes of operation, Data Recall and Transfer described in OPERATIONAL DETAILS.
7. At the end of the experiment, set High Voltage to 0 volts by turning the HV Adjust dial completely counter clockwise to 0.00 setting.
8. Switch the instrument OFF by setting the ON/OFF switch to OFF position.

5.2 OPERATIONAL DETAILS

5.2.1 DEFAULT PARAMETERS

Model **PNC-1G** is a versatile instrument, including the HV supply and front end electronics required by the GM Detector. For each of these configurations, it is necessary to set certain parameters such as Preset Time, Number of Runs (repetitions). These parameters values will be loaded when the particular mode of operation is activated.

Model **PNC-1G** has following default values for these parameters. These default values can be loaded if required.

DEFAULT PARAMETER VALUES

PRESET TIMER

TIME	: 1 second (0001)
Number of RUNS	: 10 (0010)